B.TECH. DEGREE IV SEMESTER (SUPPLEMENTARY) EXAMINATION IN MECHANICAL ENGINEERING, JUNE 2001

ME 405 MACHINE DRAWING II

(1998 Admissions)

Time: 3 Hours | Maximum marks: 100

I. The isometric view of a protected type flanged coupling is shown in figure. 1. Draw the following views:

(i) Top half sectional elevation (25)

(ii) End view looking from the right hand side. (15)

OR

II. The isometric view of a footstep bearing is shown in figure. 2. Draw the following views:

(i) Left half sectional elevation. (25)

(ii) Plan (15)

III. Details of a Rams bottom safety valve is shown in figure 3. Draw the following views to a suitable scale.

(i) Right half sectional elevation. (35)

(ii) End view from left hand side. (25)

OR

IV. Details of a lathe tool post is given in figure 4. Draw the following views to a suitable scale:

(i) Right half sectional elevation. (35)

(ii) Plan (25)

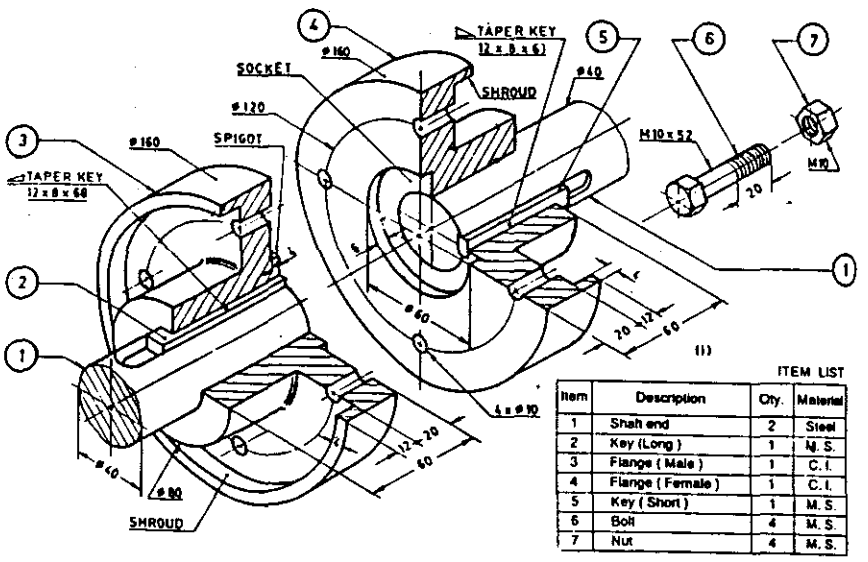

ITEM LIST

Item	Description	Qty.	Material
1	Shaft end	2	Steel
2	Key (Long)	1	M. S.
3	Flange (Male)	1	C. I.
4	Flange (Female)	1	C. I.
5	Key (Short)	1	M. S.
6	Bolt	4	M. S.
7	Nut	4	M. S.

Fig. 1

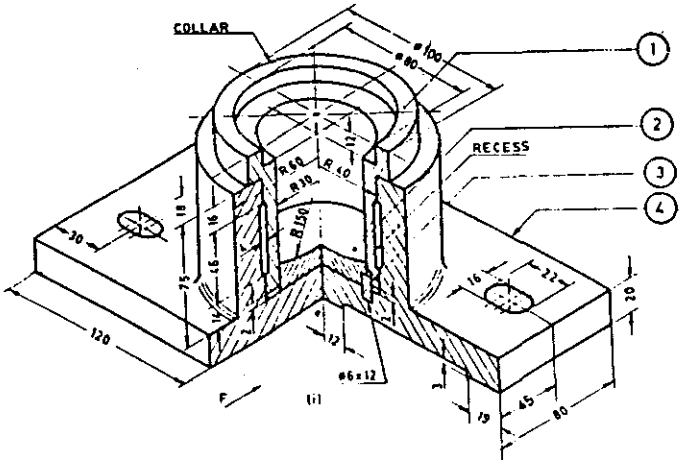

Fig. 2

(Turn over)

ITEM LIST

Item	Description	Qty	Material
1	Bush	1	G M
2	Pad	1	G M
3	Snug	1	Steel
4	Block	1	C I

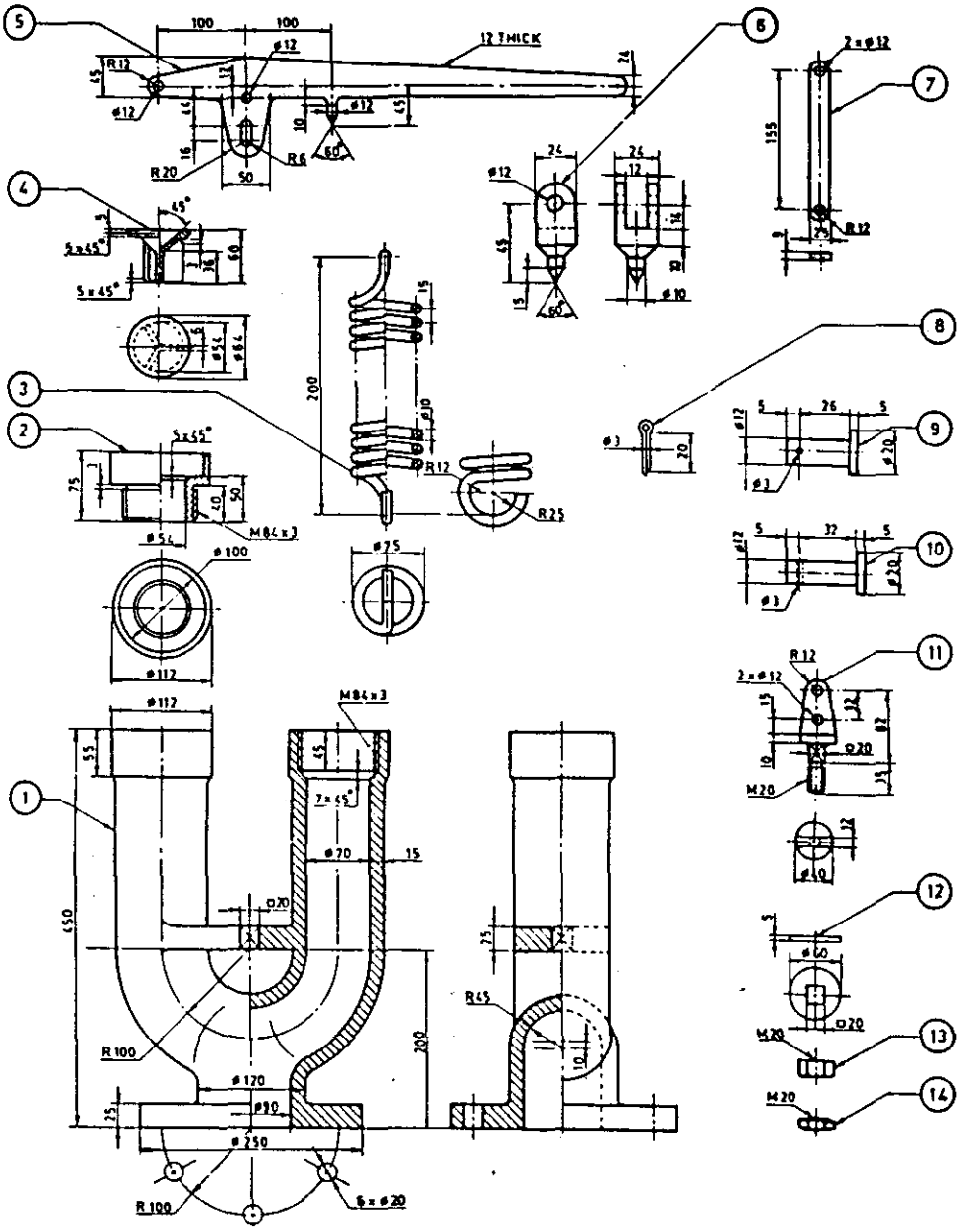

Item	Description	Qty	Material
1	Body	1	C.I.
2	Valve seat	2	G.M.
3	Spring	1	Steel
4	Valve	2	G.M
5	Lever	1	M.S.
6	Pivot	1	M.S.
7	Link	2	M.S.
8	Split pin	3	M.S.
9	Pin for link	2	M.S.
10	Pin for pivot	1	M.S.
11	Shackle	1	M.S.
12	Washer	1	M.S.
13	Nut	1	M.S.
14	Lock nut	1	M.S.

Fig.3

Contd.....3.

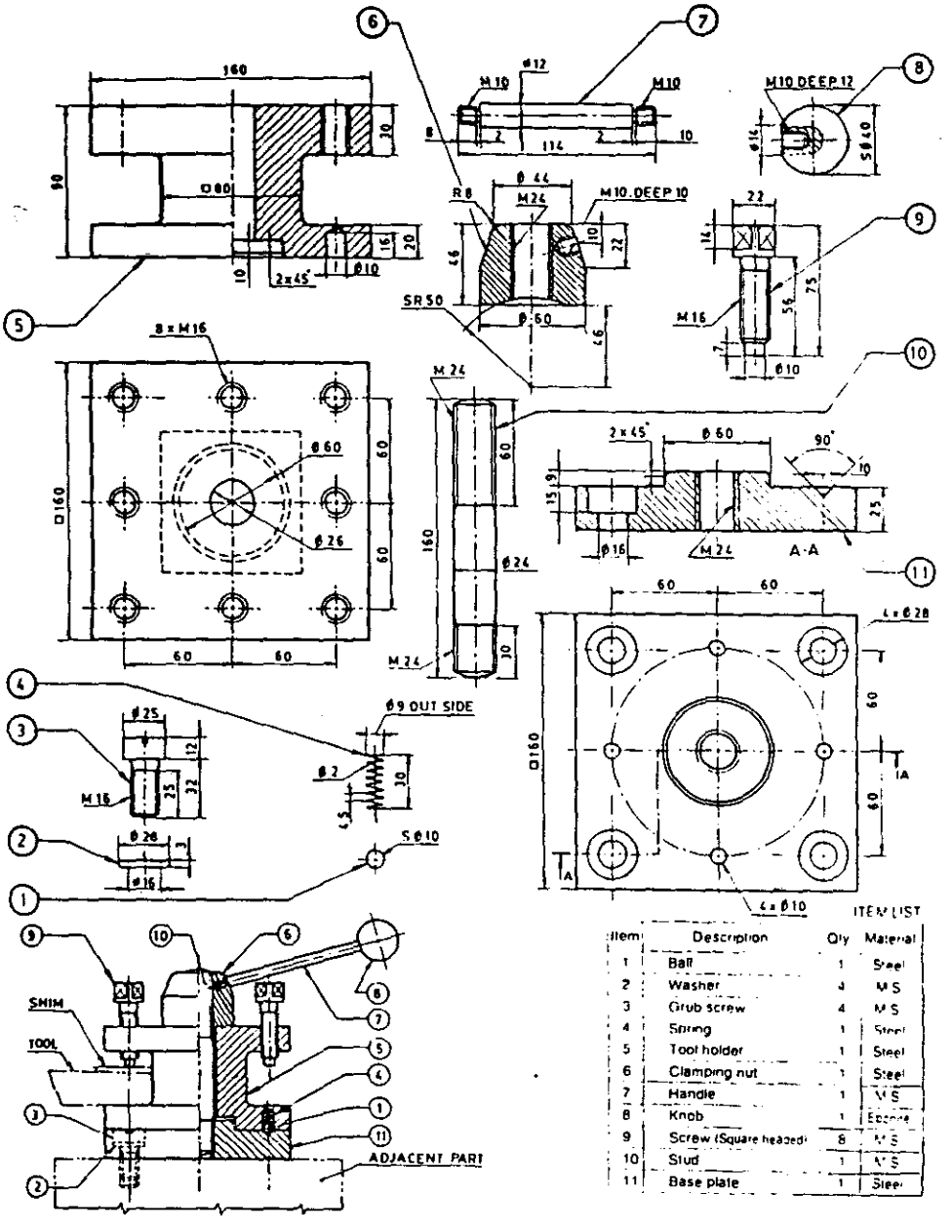

ITEM LIST

Item	Description	Qty	Material
1	Ball	1	Steel
2	Washer	4	M S
3	Grub screw	4	M S
4	Spring	1	Steel
5	Tool holder	1	Steel
6	Clamping nut	1	Steel
7	Handle	1	M S
8	Knob	1	Ebonite
9	Screw (Square headed)	8	M S
10	Stud	1	M S
11	Base plate	1	Steel

Fig.4

***

SCHOOL OF ENGINEERING, KOCHI-682 022
COCHIN UNIVERSITY OF SCIENCE & TECHNOLOGY
LIBRARY